STRUCTURAL PERFORMANCE ANALYSIS AND DESIGN OF ROOF MOUNTED SOLAR PANELS

Meghana A Patankar[1], Sripadraj K Kanchi[2], Rajesha R N[3], Prasanna Kumar[4]

[1]*M.Tech Student, Civil EngineeringDepartment, Bangalore Institute of Technology, Bengaluru, Karnataka, India*
[2]*M.Tech Student, Civil Engineering Department, Bangalore Institute of Technology, Bengaluru, Karnataka, India*
[3]*M.E Student, Civil Engineering Department, University Visvesvaraya College of Engineering (BU), Bengaluru, Karnataka, India*
[4]*Managing Director, Smartminds Engineering PVT LTD, Bengaluru, Karnataka, India*

Abstract

The use of non-renewable source of energy in generation of electricity has led to emission of pollutants which has caused global warming. The increase in pollution has created awareness in public to use renewable source of energy such as solar energy which can be harnessed without the release of harmful pollutants to the environment. In our study solar photovoltaic panels are fixed on roof of existing industrial building in Kolar district Karnataka. The main purpose of the analysis is to decide the structural sections and connections to support the solar panel which are mainly loaded by wind load. The analysis is done in accordance with IS-875(Part III) 1987and all the calculations are done manually as per codal provisions.

Keywords *—Stability Analysis, Wind Parameters, Sectional Properties, Pitched Roof, Photovoltaic Panels.*

----------***----------

1. INTRODUCTION

The use of non-renewable source of energy like coal, oil, gas in generation of electricity are getting scarce and has led to the emission of pollutants to atmosphere which has resulted in global warming. The results of a recent review of literature concluded that as greenhouse emitters begin to be held liable for resulting in climate change, a high value for liability mitigation would provide powerful incentives for development of renewable energy technologies like solar energy.

This project is about optimal structural design of solar panel supporting structure over a pitched roof of existing industrial building. In this study we are bringing forth the design challenges involved in finding optimized solutions to effectively resist the forces of wind and gravity on a solar panel structure. The existing factory building is located at Malur Kolar district about 80kms from Bengaluru. The solar PV panels are mounted on U-purlins which are in turn supported on existing building roof purlins. Roof top solar panel installation adds some dead load due to weight of panels and mounting systems. Once the size of the solar panel is fixed, the existing structure must be evaluated for added solar panel loads. The structural support systems for these building vary widely. Wood framed, wood truss, steel framed and pre engineering steel buildings are the most common type of supporting structures encountered. In this study, support section is given by Purlin and Channel section. When designing a new solar panel installation; wind, seismic and snow loads must be considered according to the region and efforts must be made to minimize their impact on existing structure. Roof top mounted solar panels are often located at the highest elevation of the structure and subjected to wind load. The solar panel mounting system's lateral load carrying capacity is often the limiting factor in the mounting system design and the wind forces are often responsible for generating the lateral loads in case of solar panel installation.

The diagrammatic representation of solar panel installation is as shown in **Fig-1.**

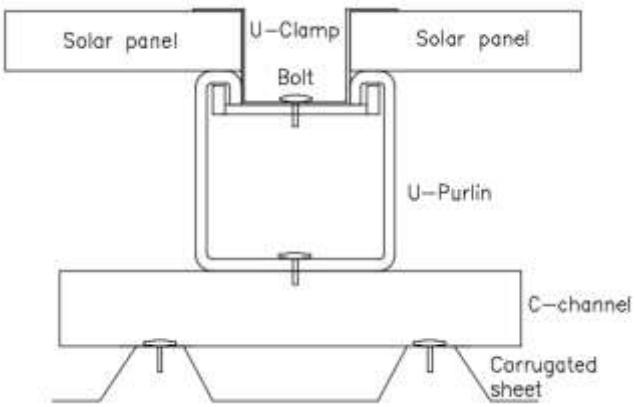

Existing sheet roof of the structure

Fig-1: Representation of solar panel installation

2. OBJECTIVE

During past few decades, the design of Roof Mounted Solar System received enough attention but Analysis and Design using Indian Standard Code have not been concentrated much.

This paper concentrates on to check the performance of different type of purlins, so as to optimize the design of mounting system to resist all possible forces acting over it. For this two profiles of purlins are considered, the sections are as shown below in **Fig-2** and **Fig-3.**

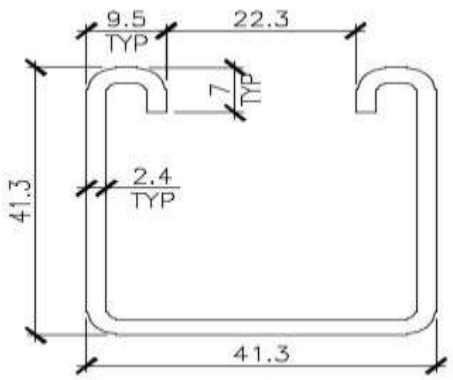

Fig-2: U-Purlin

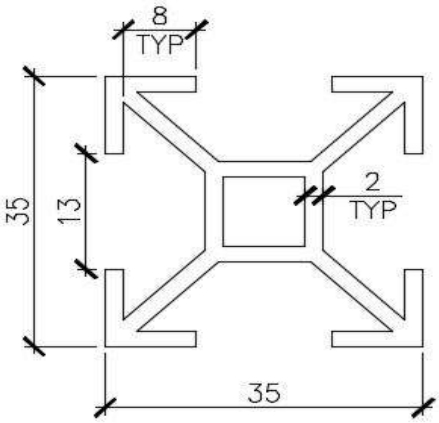

Fig-3: Star Section

3. MASTER DATA

Plan dimension of the structure	60.96m X 60.96m
Height of the building	11.6m
Slope of the roof	6 Degree
Roof	Inaccessible, Corrugated sheet roofing

4. DESIGN METHODOLOGY

Self-weight of PV panel and number of panels per bay is calculated. Wind parameters like wind speed, wind pressure, pressure coefficient are determined according to IS 875 (part III) 1987. Further we proceed with calculation of moment capacity of purlin and capacity of bolt in accordance with IS 800: 2007. Finally pull-out strength of bolt is determined.

Self-weight of PV panel and number of PV panels per bay is given by;

$$W_1 = \frac{W_g * 9.81}{L * n} * N$$

W_g	Self-weight of solar panel
N	Total number of PV panel per bay
N	No of purlins
L	Total span in longitudinal direction

Wind parameters like wind speed, wind pressure, external and internal pressure co-efficient are determined according to IS-875 (part III)-1987.

Wind Parameters

Design wind speed (V_z) (Cl.5.3 IS 875 PART III)

$$V_z = V_b * K_1 * K_2 * K_3$$

V_b	Basic wind speed
K_1	Probability factor (risk coefficient) (CL.5.3.1)
K_2	Terrain, height and structure size factor (CL.5.3.2)
K_3	Topography factor (CL.5.3.3)

Design wind pressure (P_z) (Cl.5.4 IS 875 PART III)

$$P_z = 0.6 * V_z^2$$

Pressure Co-Efficient

External pressure co-efficient (C_{pe})

External pressure co-efficient are taken from the Table 16 of IS: 875 (PART III) as factory building resembles.

Internal pressure co-efficient (C_{pi}) IS: 875 (PART III) (Cl.6.2.3.2)

Medium opening i.e. 5 to 20%:- ± 0.5

Resultant Pressure

$$F = (C_{pe} - C_{pi}) * A * P_d$$

C_{pe}	External pressure coefficient
C_{pi}	Internal pressure- coefficient
A	Surface area of structural or cladding unit.
P_d	Design wind pressure

Further we proceeded with calculation of moment carrying capacity of purlin and capacity of bolt in accordance with IS-800-2007. Finally pull-out strength of bolt is determined.

Moment Capacity of Aluminium Purlin

$$Z = \frac{M}{f}$$

$$M = f * Z$$

$$Z = \frac{I}{y}$$

F	Tensile strength of Aluminium purlin
I	Moment of inertia of Aluminium purlin
Y	Centroid of Aluminium purlin

Moment due to Load on Purlin

$$M = \frac{WL^2}{8}$$

W	Wind load acting on purlin
L	Centre to Centre distance between the purlin

NOTE: - For the structure to be safe the moment due to wind load on purlin should be less than the moment capacity of aluminium purlin.

Calculation of bolt capacity

Shear capacity of the bolt, IS 800 (Cl.10.3.3)

Design strength of the bolt is calculated as

$$V_{dsb} = \frac{V_{nsb}}{\Upsilon_{mb}}$$

Where V_{nsb}= Nominal shear capacity of a bolt, calculated as follows:

$$V_{nsb} = \frac{f_u}{\sqrt{3}}(n_n A_{nb} + n_s A_{sb})$$

f_u	Ultimate tensile strength of a bolt
n_n	Number of shear planes with threads intercepting the shear plane
n_s	Number of shear planes without threads intercepting the shear plane
A_{sb}	Nominal plain shank area of the bolt
A_{nb}	Net shear area of the bolt at threads, may be taken as the area corresponding to root diameter at the thread.

Bearing capacity of the Bolt, IS 800 (Cl.10.3.4)

The design bearing strength of a bolt on any plate, V_{dpb} *as* governed by bearing is given by

$$V_{dpb} = \frac{V_{npb}}{\Upsilon_{mb}}$$

V_{npb}= Nominal bearing strength of a bolt

$$V_{npb} = 2.5 * K_b * d * t * f_u$$

K_b is smaller of $\frac{e}{3*d_o}, \frac{P}{3d_0} - 0.25, \frac{f_{ub}}{f_u}, 1$

e, p	End and Pitch distances of the fastener along bearing direction
d_o	Diameter of the hole
f_{ub}, f_u	Ultimate tensile stress of the bolt and the ultimate tensile stress of the plate
d	Nominal diameter of the bolt
t	Summation of the thicknesses of the connected plates experiencing bearing stress in the same direction, or if the bolts are countersunk, the thickness of the plate minus one half of the depth of countersinking.

NOTE: - Design strength of the bolt is taken as minimum of strength obtained in shear and bearing.

Tension capacity of the bolt, IS 800 (Cl.10.3.5)

Design tension capacity of bolt is calculated as

$$T_{db} = \frac{T_{nd}}{\Upsilon_{mb}}$$

T_{nd}= Nominal tensile capacity of the bolt

$$T_{nd} = 0.9 * f_{ub} * A_n < f_{yb} * A_{sb} \frac{\Upsilon_{mb}}{\Upsilon_{mo}}$$

f_{ub}	Ultimate tensile stress of the bolt
f_{yb}	Yield stress of the bolt
A_n	Net tensile stress area as specified in the appropriate Indian Standard (for bolts where the tensile stress area is not defined, A_n shall be taken as the area at the bottom of the threads)
A_{sb}	Shank area of the bolt

Pull-out force

The pull-out strength is the force that would have to be applied to tear the screw out of its anchoring. It depends on the multiple factors like screw geometry, screwing in depth, materials used, thread length etc.

$$F = \tau * \pi * D_p * L * S$$

F	Pull-out force
T	Shear stress= $\frac{\sigma_t}{\sqrt{3}}$
σ_t	Tensile yield stress or design stress
D_p	Pitch diameter
L	Axial length of full thread engagement
S	Safety factor= $1.2c_1c_2$
c_1	1.0 for special screws
c_2	1.5 for ordinary screws
c_2	$10\varepsilon_{br}$ ($\geq$1.0)
ε_{br}	Elongation at break (%)

NOTE: -Pull out force of bolt should always be greater than reaction at purlin where bolt connects.

5. DETAILED CALCULATION

5.1 Design Load Calculation for Multi-Span Mounted Solar Power Project (C-Channel)

Calculations are done in accordance with the formulae given in the design methodology.

Centre to Centre distance of Purlins= 1.5m

Structural Parameters

PV Panel dimensions	
W	1.67m
B	0.91m
T	40m
Self-Weight of PV panel W_g	18kg
No. of Purlins per bay	11
Length in X direction 1 bayX	15.24
Length in Y direction 1 bayY	6.096
Total number of bays	10
Total number of PV panels Per Bay	62

Self-Weight of PV panel on each purlin

$$W_1 = \frac{18 * 9.81}{6096 * 11} * 62$$

W_1= 0.17N/mm

Wind Parameters

Basic wind speed (Kolar)	V_b	33m/s
Probability factor	K_1	1 (CL.5.3.1)
Terrain, height and structure size factor	K_2	0.99 (CL.5.3.2)
Topography Factor	K_3	1 (CL.5.3.3)
Design wind speed	V_z	32.67m/s
Design wind pressure	P_z	640.4N/m^2

External pressure coefficient (C_{pe}) for Pitched roof Multiplan building is given in **Table 1.**

Table 1: External pressure coefficient (C_{pe})

Wind Force Calculations

Net-pressure coefficient	C_{pe}	C_{pi}	
Roof A	-2	0.5	Table 16,IS-875 PART III Cl.6.2.2.6
Roof B	-1.5	0.5	
Roof X	-1.5	0.5	
Roof Z	-2	0.5	

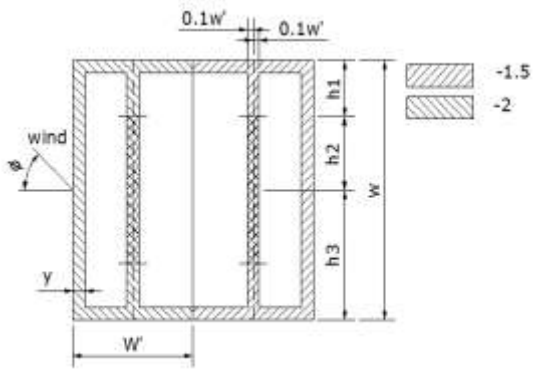

Fig 4. Representation of pressure coefficients

Wind Blowing Perpendicular to the Ridge

Windward=
(-2-0.5)x1.5x640.4/1000 =-2.4kN/Mx-1=2.4KN/M

Leeward=
(-1.5-0.5)X1.5X640.4/1000=-1.92KN/Mx-1 =1.92kN/m

Tensile strength	195.00MPa
Width of purlin	41.30mm
Height of purlin	41.30mm
Thickness	2.40mm
Neutral axis Depth	20.65mm (d/2) (Assumed)
Aluminium purlin moment of inertia (From AutoCAD)	91230.40mm^4
Maximum moment capacity of aluminium purlin	.

$$M = \frac{f}{I} * y$$

f= Tensile strength of Aluminium purlin
I= Moment of inertia of Aluminium purlin
y= Centroid of Aluminium purlin

$$M = \frac{195}{20.65} * 91230.4$$ **0.86kN-m**

Moment due to Load on purlin **0.68kN-m**

$$M = \frac{2.40 * 1.5^2}{8} = 0.68\text{kN-m}$$

For the structure to be safe the moment due to wind load on purlin should be less than the moment capacity of aluminum purlin.

5.2 Design Load Calculation for Multi-Span Mounted Solar Power Project (Star Shaped Profile) - for Extreme Values of External Pressure Co-Efficient

Tensile strength	195.00MPa
Width of purlin	35.00mm
Height of purlin	35.00mm
Thickness	2.40mm
Neutral axis Depth	17.50mm (d/2) (Assumed)
Aluminium purlin moment of inertia (From AutoCAD)	45241.96mm^4
Maximum moment capacity of aluminium purlin	.

$$M = \frac{f}{I} * y$$

f= Tensile strength of Aluminium purlin
I= Moment of inertia of Aluminium purlin
y= Centroid of Aluminium purlin

$M = \frac{195}{17.5} * 45241.96$	**0.50kN-m (Not Safe as 0.5kNm<0.68kNm)**
Moment due to Load on purlin	**0.68kN-m**

For the structure to be safe the moment due to wind load on purlin should be less than the moment capacity of aluminium purlin. In this case it is not so, therefore section has to be revised by increasing the width of Star purlin to 45mm.

Tensile strength	195.00MPa
Width of purlin	45.00mm
Height of purlin	35.00mm
Thickness	2.40mm
Neutral axis Depth	17.50mm (d/2) (Assumed)
Aluminium purlin moment of inertia (From AutoCAD)	66454.9mm^4
Maximum moment capacity of aluminium purlin	.
$M = \frac{195}{17.5} * 66454.9$	**0.74kN-m**
Moment due to Load on purlin	**0.68kN-m**

The maximum moment carrying capacity of aluminium purlin is greater than moment due to wind load, which indicates that revised Star section is Safe.

Bolt capacity

Shear, Bearing and Tension Capacity of the Bolt

Design Parameters

Diameter of the bolt	d	8mm
Nominal diameter of bolt	d_o	10mm
Thickness of plate	t	2.40mm
Minimum Pitch distance	P_{min}	20mm (IS800, Cl10.2.2)
Minimum Edge distance	e_{min}	15mm(IS800, Cl10.2.4.2)
Maximum Pitch distance	P_{max}	77mm(IS 800,Cl10.2.3.1)
Maximum Edge distance	e_{max}	47mm (IS 800 Cl10.2.4.3)
Ultimate tensile strength of a bolt	f_{ub}	195N/mm^2
Yield stress of the bolt	f_{yb}	156N/mm^2(0.8 f_{ub})
Ultimate tensile strength of a plate	f_u	195N/mm^2
Number of shear planes with threads intercepting the shear plane	n_n	1.00
Number of shear planes without threads intercepting the shear plane	n_s	0.00
Number of bolts provided	n_b	1.00
Partial safety factor for bolted connection with bearing type bolts	γ_{mb}	1.25
Partial safety factor against yield stress and buckling	γ_{m0}	1.10
Nominal plain shank area of the bolt	A_{sb}	50.26mm^2
Net shear area of the bolt at threads	A_{nb}	40.20mm^2

Shear Capacity of Bolt

Nominal shear capacity of the bolt	V_{nsb}	4.53kN
Design strength of the bolt	V_{dsb}	3.62kN

Bearing Capacity of Bolt

Reduction factor	K_b	0.417
Nominal bearing capacity of a bolt	V_{npb}	3.90kN
Design bearing capacity of a bolt	V_{dpb}	3.12kN

NOTE: The design strength of the bolt shall be taken as the smaller of the value as governed by shear (V_{dsb}) and bearing (V_{dpb}).

Bolt capacity	V_{db}	3.12kN

Tension Capacity

Design tension capacity of bolt	T_{db}	7.06kN
Total tensile force in the bolt	T_b	4.45kN
Reaction at Purlins where bolt connects		1.21kN

Bolt Capacity

Shear, Bearing and Tension Capacity of the Bolt

Design Parameters

Diameter of the bolt	d	6mm
Nominal diameter of bolt	d_o	8mm
Thickness of plate	t	2.40mm
Minimum Pitch distance	P_{min}	15mm (IS800, Cl10.2.2)
Minimum Edge distance	e_{min}	12mm(IS800, Cl10.2.4.2)
Maximum Pitch distance	P_{max}	77mm(IS 800,Cl10.2.3.1)
Maximum Edge distance	e_{max}	47mm (IS 800 Cl10.2.4.3)
Ultimate tensile strength of a bolt	f_{ub}	195N/mm^2
Yield stress of the bolt	f_{yb}	156N/mm^2 (0.8 f_{ub})
Ultimate tensile strength of a plate	f_u	195N/mm^2
Number of shear planes with threads intercepting the shear plane	n_n	1.00
Number of shear planes without threads intercepting the shear plane	n_s	0.00
Number of bolts provided	n_b	1.00
Partial safety factor for bolted connection with bearing type bolts	γ_{mb}	1.25
Partial safety factor against yield stress and buckling	γ_{mo}	1.10
Nominal plain shank area of the bolt	A_{sb}	28.27mm^2
Net shear area of the bolt at threads	A_{nb}	22.62mm^2

Shear Capacity of Bolt

Nominal shear capacity of the bolt	V_{nsb}	2.55kN
Design strength of the bolt	V_{dsb}	2.04kN

Bearing Capacity of Bolt

Reduction factor	K_b	0.375
Nominal bearing capacity of a bolt	V_{npb}	2.63kN
Design bearing capacity of a bolt	V_{dpb}	2.10kN

NOTE: The design strength of the bolt shall be taken as the smaller of the value as governed by shear (V_{dsb}) and bearing (V_{dpb}).

Bolt capacity	V_{db}	2.04kN

Tension Capacity

Design tension capacity of bolt	T_{db}	3.97kN
Total tensile force in the bolt	T_b	4.45kN
Reaction at Purlins where bolt connects		1.21kN

Pull-out Force Calculation

Shear stress= $\frac{\sigma_t}{\sqrt{3}}$	τ	112.50N/mm^2
Tensile yield stress or design stress	σ_t	195N/mm^2
Pitch diameter	D_p	
Axial length of full thread engagement	L	0.00159mm
Safety factor	S	1.8
Pull-out Force	F	2.50kN

Pull out force of bolt should always be greater than reaction at purlin where bolt connects. Hence safe.

5. CONCLUSION

The study provides the importance of Analysis with respect to selection of purlins in accordance with their stability and durability against the Forces acting due to self-weight and wind forces .The following conclusions are derived from the study performed.

- The length, width and thickness of the section are main key factor for influencing in increasing/decreasing in moment of inertia of the section. The moment of inertia of the section is the resulting parameter which decides the stability of the type and profile of the purlin section.The study indicates that purlin with higher moment of inertia has better moment carrying capacity. The U-Purlin offers better moment carrying capacity compared to higher star section.
- The capacity of bolt is governed by various parameters like tensile strength, diameter of bolt/screw, length etc. the results from our study specifies that the stability of panel is directly dependent on number of bolts provided around the panel.
- The resulting reaction forces at the connections of solar panel to the supporting purlin is the limiting factor for

pull-out force of screws. The result from the study specifies that bolts with better shear capacity and axial length of the full thread engagement of screws offer better resistance against pull-out forces over the solar panel.

- Post installation studies indicate that the pitched roofs offer better energy output from P.V panels.
- The reactions forces calculated in accordance with IS 875 for wind loads are fairly accurate to that of the values obtained using professional structural analysis package like Stadd-pro.

REFERENCES

[1] Stephen Dwyer, Alan Harper, William Lindau, Tom Bosiljevac, Kay Schindel and Elizabeth Richards: *"Structural Considerations for Solar Installers"*, Dec 2011.

[2] EleniXypnitou, "*Wind Load on Solar Panel Systems Attached to Building Roof"*, Aug 2012.

[3] A. Mihailidis, K. Panagiotidis and K. Agouridas , "*Analysis of Solar Panel Support Structures*", Sept 2009.

[4] IS: 875 (Part I) -1987, Code of Practice for Design Loads (Other than Earthquake) for Buildings and Structures. Part I dead loads — unit weights of building materials and stored materials

[5] IS: 875 (Part II) -1987, Code of Practice for Design Loads (Other than Earthquake) for Buildings and Structures.Part II imposed loads.

[6] IS: 875 (Part III) -1987, Code of Practice for Design Loads (Other than Earthquake) for Buildings and Structures.Part III wind Loads

[7] IS 800:2007, General Constructions in Steel-Code of Practice.